EC20-0808ERN I/O Extension Module User Manual

1 General Description

The appearance of the EC20-0808ERN extension module is shown in Figure 1.

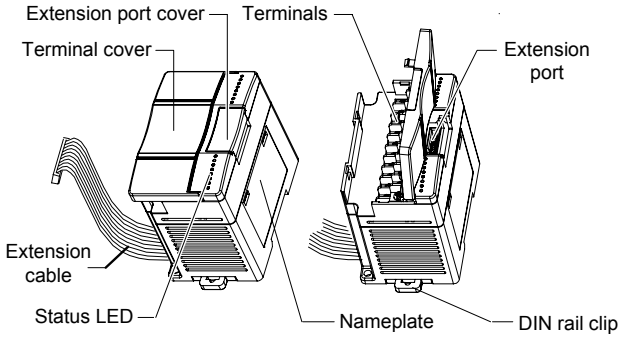

Figure 1 Appearance

2 Installation

Dimensions

The outline dimensions and installation dimensions are shown in Figure 2.

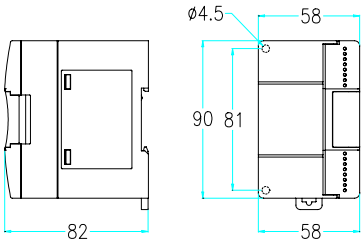

Figure 2 Dimensions (unit: mm)

Installation

The installation of EC20-0808ERN is the same as that of the basic module. Please refer to the *EC20 Series PLC User Manual* for details. The installation method of EC20-0808ERN is illustrated in Figure 3.

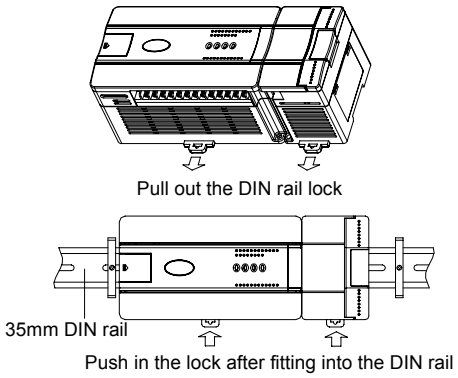

Figure 3 Fixing EC20-0808ERN on DIN rail

3 Specifications

Table 1 configuration

Model	Supply voltage Vac	Input/output points	Output type
EC20-0808ERN	/	8/8	Relay

Table 2 Dielectric strength specifications

Item	Specifications
Output to extension bus	Able to withstand 50Hz, 2830Vac or equivalent DC voltage for one minute without breakdown or flashover and with leakage current not more than 30mA
Input to output	Able to withstand 50Hz, 2830Vac or equivalent DC voltage for one minute without breakdown or flashover and with leakage current not more than 30mA
Input to extension bus	SELV circuit requirements are met

Table 3 Power supply requirements

Voltage	Current	Remark
5V/GND	30 mA	The working power of the logical circuit is provided by the extension bus
24V/GND	50 mA	The working power of the relay output circuit is provided by the extension bus
24V/COM	50 mA	The input status sensing power is fed through the “24V” terminal

Before connecting the PLC to the extension module, to prevent the basic module from being overloaded, you should:

1. Add up the current consumption of all power loops of the extension module.

2. Make sure the current consumption of each power loop of the extension module is smaller than the output current the corresponding power source of the basic module can provide.

The solution to insufficient power supply is to select an extension module with self-carried power source. Besides providing power for itself, it can provide power to the extension module added later through its 5Vdc, 24Vdc/GND and 24Vdc/COM terminals.

4 Input Characteristics

The extension module should be connected to external switch status detecting power (24Vdc). The internal equivalent resistance of its input circuit is approximately 4.3kΩ. The signal sensing adopts bi-directional optical coupling, and the signal input can be source or sink type. You only need to connect dry contact switch signals. If you need to connect output signals of active transistor sensors, they should be OC output signals. The IO extension module’s internal equivalent circuit and input signal connections resemble the mains module’s input circuit, see Figure 4.

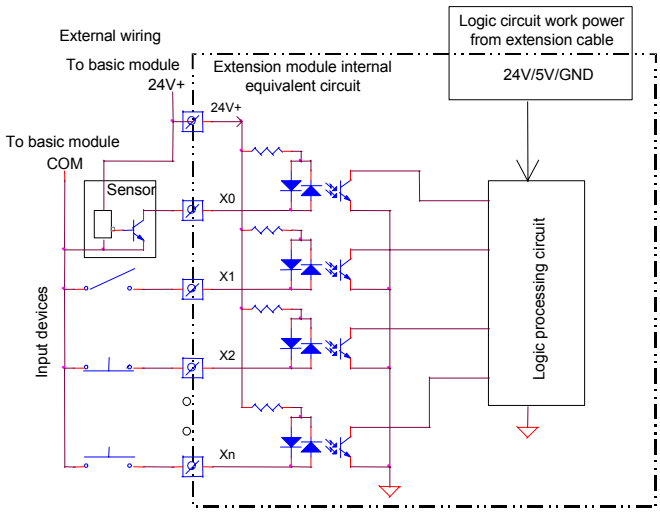

Figure 4 Internal equivalent input cirucit

I/O Status Indication

The input status LEDs indicate the status of the user input port. It is on when the input port is closed (ON), and off otherwise. When Pins X0~X7 receive high frequency signals, the LED flashing frequency may be lower than the actual input signal frequency for the convenience of the user to observe the characteristics of the port signals.

The output status LEDs indicate the status of the output port. It is on when the output port is closed (ON, with pin Yn connected to pin COMn), and off otherwise. See Figure 5.

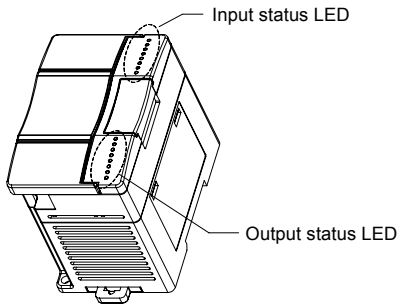

Figure 5 Status LEDs

5 Output Characteristics

Table 4 Electrical specifications of output port

Item		Relay output port
Voltage		250Vac, below 30Vdc
Current		Single point: 2.0A/250Vac. Total current of the eight points sharing COM: less than 8A
Circuit insulation		Relay physical insulation
Action indication		LED turns on when the relay output contact is closed
Open circuit leakage current		/
Min. load		2mA/5Vdc
Max current	Resistive load	2A/1 point
	Inductive load	220Vac,80VA
	Electric light load	220Vac,100W
ON response time		20ms Max
OFF response time		20ms Max

Output Connection Example

Figure 6 shows the connection between EC20-3232BRA and EC20-0808ERN. Different output groups can connect to different signal voltage loops. Some output groups (like Y0-COM0) can connect to +24Vdc loop and can be supplied by 24V/COM of the EC20 PLC; some (like Y1-COM1) can connect to +5Vdc low voltage signal loop; while others (like Y2~Y7) can connect to 220Vac signal loop. That is to say, the output groups can work at different voltage level.

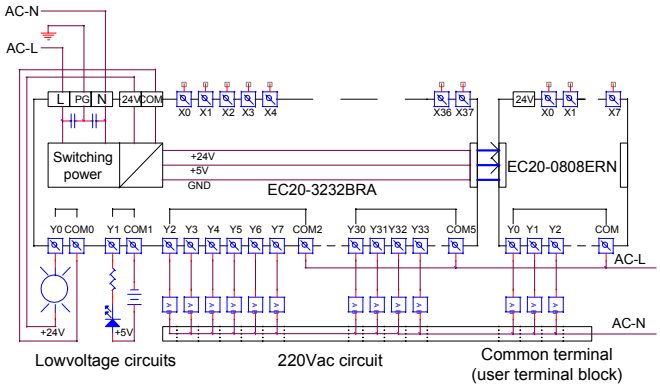

Figure 6 Connection bet. EC20-3232BRA and EC20-0808ERN

6 Extension Connection

6.1 Connecting Extension Bus

Power off the basic module, remove the cover of the extension port at the right end of the basic module, insert the extension cable of the extension module into this port, and replace the cover. In case you need to connect more extension modules, just connect them one by one using the same method.

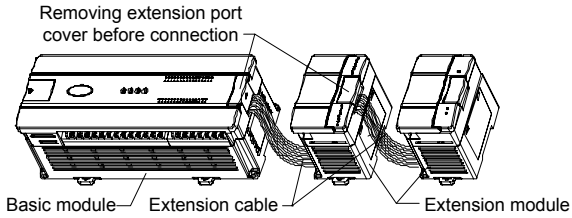

Figure 7 Extension modules in cascade connection

6.2 Addressing Extension Module

EC20 series PLC can automatically identify and address the connected extension modules in sequence, with no need of user interference.

The automatic addressing is performed once and for all after power-on, and the address will not change afterwards in operation. When the PLC is in operation, it is not allowed to connect or disconnect any IO extension modules or special functional modules, as which may cause damage or malfunction to the PLC.

The extension module with self-carried power source must be powered on at the same time as or before the basic module, so as to ensure reliable addressing.

The IO point coding adopts octal coding, i.e., 0, 1, 2, 3, 4, 5, 6, 7, 10, 11, 12, 13, 14, 15, 16, 17, 20, 21, …, no 8 or 9.

The input port coding of the basic module and IO extension module is: X0, X1, X2, …X7, X10, X11, …; their output port coding is: Y0, Y1, Y2, …Y7, Y10, Y11, …and so on. In coding, the input ports are grouped eight by eight, the part falling short of eight are kept vacant.

Take the EC20-2012BRA module as an example, the input has 20 points, the coding is from X0 to X23, terminals from X24 to X27 do not exist, the X terminals of the extension modules added later start from X30; likewise, the output has 12 points, the coding is from Y0 to Y13, terminals from Y14 to Y17 do not exist, the Y terminals of the extension modules added later start from Y20.

The X and Y terminals of the IO extension modules are coded in the sequence they are added into the system.

Example of logic coding of the basic module's and extension module's ports:

EC20-2012B	0808ER	0808ER	4AD	4AD	4DA	0808ER	4TC
X0 ~ X23 Y0 ~ Y13	X30 ~ X37 Y20 ~ Y27	X40 ~ X47 Y30 ~ Y37	0	1	2	X50 ~ X57 Y40 ~ Y47	3

Notice

1. The warranty range is confined to the PLC only.
2. **Warranty period is 18 months**, within which period Emerson Network Power conducts free maintenance and repairing to the PLC that has any fault or damage under the normal operation conditions.
3. **The start time of warranty period is the delivery date of the product**, of which the product SN is the sole basis of judgment. PLC without a product SN shall be regarded as out of warranty.
4. Even within 18 months, maintenance will also be charged in the following situations:
   - Damages incurred to the PLC due to mis-operations, which are not in compliance with the User Manual;
   - Damages incurred to the PLC due to fire, flood, abnormal voltage, etc;
   - Damages incurred to the PLC due to the improper use of PLC functions.
5. The service fee will be charged according to the actual costs. If there is any contract, the contract prevails.
6. Please keep this paper and show this paper to the maintenance unit when the product needs to be repaired.
7. If you have any question, please contact the distributor or our company directly.

ENP Services China

Emerson Network Power Co., Ltd.

Address: No.1 Kefa Rd., Science & Industry Park, Nanshan District 518057, Shenzhen China

Homepage: www.emersonnetworkpower.com.cn

E-mail: support@emersonnetwork.com.cn

Version V1.1

Revision date September 5, 2006

BOM 31011167

Copyright © 2005 by Emerson Network Power Co., Ltd.

All rights reserved. The contents in this document are subject to change without notice.